EUROCRAFT INDUSTRIES INC.

300 SERIES HORIZONTAL SLIDING WINDOW (IMPACT) (HVHZ)

GENERAL NOTES:

1. THE PRODUCT SHOWN HEREIN IS DESIGNED AND MANUFACTURED TO COMPLY WITH THE CURRENT EDITION FLORIDA BUILDING CODE (FBC), INCLUDING HVHZ AND HAS BEEN EVALUATED ACCORDING TO THE FOLLOWING:
   - TAS 201-94
   - TAS 202-94
   - TAS 203-94
   - NAFS-11
   - ASTM E1886-13a
   - ASTM E1996-14a

2. ADEQUACY OF THE EXISTING STRUCTURAL CONCRETE/MASONRY, 2X FRAMING, AND METAL FRAMING AS A MAIN WIND FORCE RESISTING SYSTEM CAPABLE OF WITHSTANDING AND TRANSFERRING APPLIED PRODUCT LOADS TO THE FOUNDATION IS THE RESPONSIBILITY OF THE ENGINEER OR ARCHITECT OF RECORD FOR THE PROJECT OF INSTALLATION.

3. 1X AND 2X BUCKS (WHEN USED) SHALL BE DESIGNED AND ANCHORED TO PROPERLY TRANSFER ALL LOADS TO THE STRUCTURE. BUCK DESIGN AND INSTALLATION IS THE RESPONSIBILITY OF THE ENGINEER OR ARCHITECT OF RECORD FOR THE PROJECT OF INSTALLATION.

4. INSTALL INDIVIDUAL INSTALLATION ANCHORS WITHIN A TOLERANCE OF ±1/4 INCH OF THE DEPICTED LOCATION IN THE ANCHOR LAYOUT DETAIL (I.E., WITHOUT CONSIDERATION OF TOLERANCES). TOLERANCES ARE NOT CUMULATIVE FROM ONE INSTALLATION ANCHOR TO THE NEXT.

5. THE INSTALLATION DETAILS DESCRIBED HEREIN ARE GENERIC AND MAY NOT REFLECT ACTUAL CONDITIONS FOR A SPECIFIC SITE. IF SITE CONDITIONS CAUSE INSTALLATION TO DEVIATE FROM THE REQUIREMENTS DETAILED HEREIN, A LICENSED ENGINEER OR ARCHITECT SHALL PREPARE SITE SPECIFIC DOCUMENTS FOR USE WITH THIS DOCUMENT IN NON-HVHZ AREAS. IN HVHZ AREAS, ONE TIME PRODUCT APPROVAL TO BE OBTAINED FROM MIAMI-DADE RER OR AHJ.

6. APPROVED IMPACT PROTECTIVE SYSTEM **IS NOT REQUIRED** ON THIS PRODUCT IN AREAS REQUIRING IMPACT RESISTANCE.

7. WINDOW FRAME MATERIAL: ALUMINUM 6063-T5

8. GLASS MEETS THE REQUIREMENTS OF ASTM E 1300 GLASS CHARTS. SEE SHEET 2 FOR GLAZING DETAILS.

TABLE OF CONTENTS

SHEET	REVISION	SHEET DESCRIPTION
1	-	GENERAL NOTES
2	-	GLAZING DETAILS
3	-	ELEVATIONS & ANCHOR LAYOUTS - OX/XO
4	-	ELEVATIONS & ANCHOR LAYOUTS - OXO
5	-	WINDOW DESIGN PRESSURES - OX/XO
6	-	WINDOW DESIGN PRESURES - XOX
7	-	VERTICAL SECTIONS
8	-	HORIZONTAL SECTIONS - OX/XO
9	-	HORIZONTAL SECTIONS - XOX
10	-	INSTALLATION NOTES AND ANCHOR DETAILS & SCHEDULE
11	-	BILL OF MATERIALS & COMPONENTS

DESIGN PRESSURE TABLE

GLAZING TYPES	MAX. DESING PRESSURE	IMPACT RATING
G1, G2, G3, G4, G5 & G6	SEE SHEET 5 & 6 FOR DESIGN PRESSURE TABLES	LMI / SMI

INSTRUCTIONS FOR USE:

1. DETERMINE DESIGN WIND LOAD REQUIREMENTS BASED ON WIND VELOCITY, BUILDING HEIGHT, WIND ZONE, USING APPLICABLE ASCE 7 STANDARD.
2. SEE CHARTS ON SHEET 5 & 6 FOR DESIGN LOAD CAPACITY OF DESIRED GLASS SIZE AND CONFIGURATION. THE GLASS CONFIGURATION DESCRIPTION MAY BE FOUND ON SHEET 2.

EUROCRAFT
7905 NW 77TH AVE
MEDLEY, FL 33166
PH: (305) 713-1871 FX: (305) 713-1872

TITLE: 300 SERIES HORIZONTAL SLIDING WINDOW (IMPACT) (HVHZ)
GENERAL NOTES

PREPARED BY:
BUILDING DROPS, INC.
398 E. DANIA BEACH BLVD., STE. 338
DANIA BEACH, FL 33004
PH: (954)399-8478
FAX: (954)744.4738
WEB: www.buildingdrops.com

REMARKS	BY	DATE

THE INSTALLATION DETAILS DESCRIBED HEREIN ARE GENERIC AND MAY NOT REFLECT ACTUAL CONDITIONS FOR A SPECIFIC SITE. IF SITE CONDITIONS CAUSE INSTALLATION TO DEVIATE FROM THE REQUIREMENTS DETAILED HEREIN, A LICENSED ENGINEER OR ARCHITECT SHALL PREPARE SITE SPECIFIC DOCUMENTS FOR USE WITH THIS DOCUMENT.

Digitally signed by Hermes F Norero
Reason: I am approving this document
Date: 2020.04.10 19:15:24 -04'00'

HERMES F. NORERO LICENSE No. 73778 STATE OF FLORIDA PROFESSIONAL ENGINEER

HERMES F. NORERO, P.E.
FLORIDA P.E. No 73778
BUILDING DROPS, INC
398 E. DANIA BEACH BLVD. # 338
DANIA BEACH, FL 33004
FBPE CERT. OF AUTHORIZATION No. 29578

FL#: FL31966

DATE: 01.23.2020

DWG. BY: JA | CHK. BY: HFN

SCALE: NTS

DWG. #: ECI025

SHEET: 1 OF 11

4/10/2020 7:10 PM
s:\projects\eurocraft industries inc\fbc-19-0238 - fbc submittal - aluminum impact products\dwgs\submittal drawings\horizontal slider\eci025 - horizontal slider.dwg

4/10/2020 7:11 PM

s:\projects\eurocraft industries inc\fbc-19-0238 - fbc submittal - aluminum impact products\dwgs\submittal drawing\horizontal slider\eci025 - horizontal slider.dwg

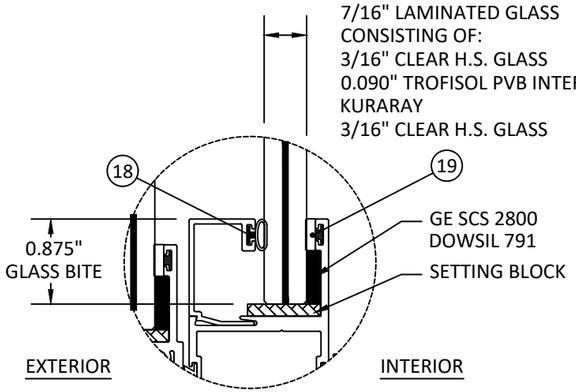

GLAZING DETAIL 1

GLAZING DETAIL 1 NOTE:
- GLASS SIZE NOT TO EXCEED 18 SQFT

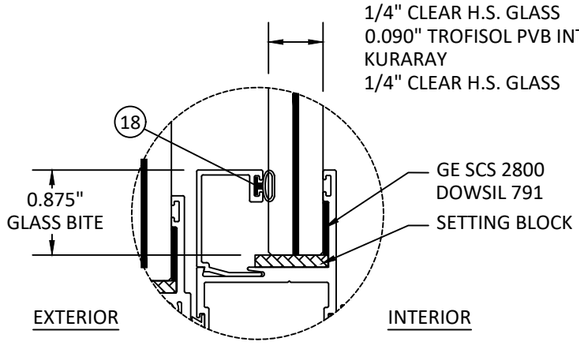

GLAZING DETAIL 3

GLAZING DETAIL 3 NOTE:
- GLASS SIZE NOT TO EXCEED 18 SQFT

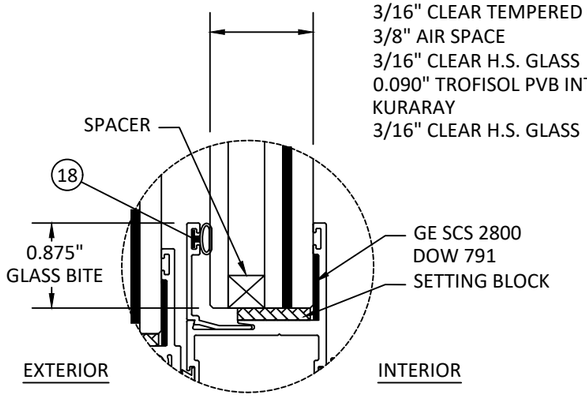

GLAZING DETAIL 5

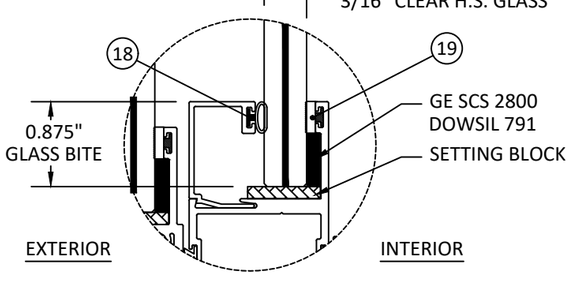

GLAZING DETAIL 2

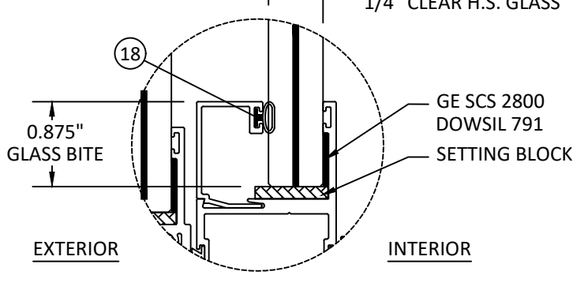

GLAZING DETAIL 4

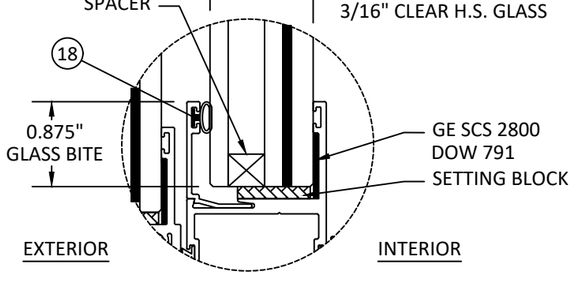

GLAZING DETAIL 6

GLAZING NOTES:
1. GLASS TYPE AND THICKNESS SHALL COMPLY WITH ASTM E1300 REQUIREMENTS AS WELL AS APPLICABLE SAFETY GLAZING REQUIREMENTS PER THE FBC. THICKNESS, TEMPER, AND SAFETY GLAZING REQUIREMENTS SHALL BE REVIEWED ON A SITE SPECIFIC BASIS.
2. SETTING BLOCK DUROMETER HARDNESS OF 70-90 (SHORE A) AS REFERENCED IN FBC CHAPTER 24.
3. SETTING BLOCKS TO BE LOCATED AT 1/4 SPAN LENGTH FOR GLASS WIDER THAN 36" AS PER FBC CHAPTER 24.
4. D.L.O. AND DESIGN PRESSURES MAY NOT EXCEED MAX VALUES IN GLASS CHARTS.

EUROCRAFT
7905 NW 77TH AVE
MEDLEY, FL 33166
PH: (305) 713-1871 FX: (305) 713-1872

TITLE: 300 SERIES HORIZONTAL SLIDING WINDOW (IMPACT) (HVHZ)

GLAZING DETAIL & GLASS CAPACITY

PREPARED BY:
BUILDING DROPS, INC.
398 E. DANIA BEACH BLVD., STE. 338
DANIA BEACH, FL 33004
PH: (954)399-8478
FAX: (954)744.4738
WEB: www.buildingdrops.com

REMARKS	BY	DATE

THE INSTALLATION DETAILS DESCRIBED HEREIN ARE GENERIC AND MAY NOT REFLECT ACTUAL CONDITIONS FOR A SPECIFIC SITE. IF SITE CONDITIONS CAUSE INSTALLATION TO DEVIATE FROM THE REQUIREMENTS DETAILED HEREIN, A LICENSED ENGINEER OR ARCHITECT SHALL PREPARE SITE SPECIFIC DOCUMENTS FOR USE WITH THIS DOCUMENT.

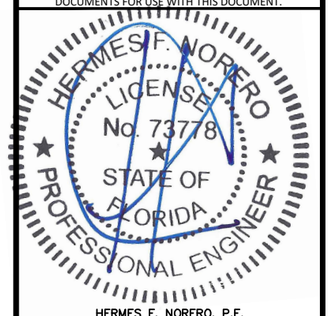

HERMES F. NORERO, P.E.
FLORIDA P.E. No 73778
BUILDING DROPS, INC
398 E. DANIA BEACH BLVD. # 338
DANIA BEACH, FL 33004
FBPE CERT. OF AUTHORIZATION No. 29578

FL#: FL31966

DATE: 01.23.2020

DWG. BY:	CHK. BY:
JA	HFN

SCALE: NTS

DWG. #: ECI025

SHEET: 2 OF 11

4/10/2020 7:11 PM

s:\projects\eurocraft industries inc\fbc-19-0238- fbc submittal - aluminum impact products\dwgs\submittal drawings\horizontal slider\eci025 - horizontal slider.dwg

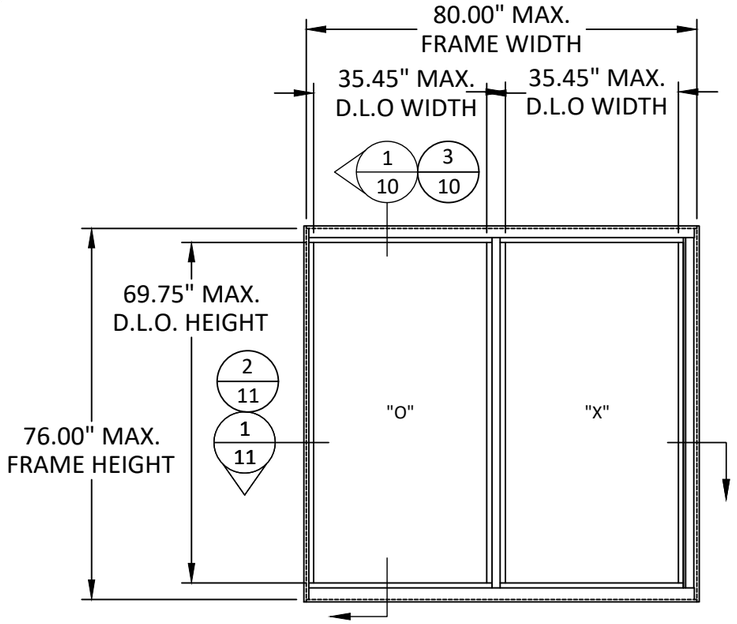

ELEVATION

OX/XO HORIZONTAL SLIDER - 1/2-1/2

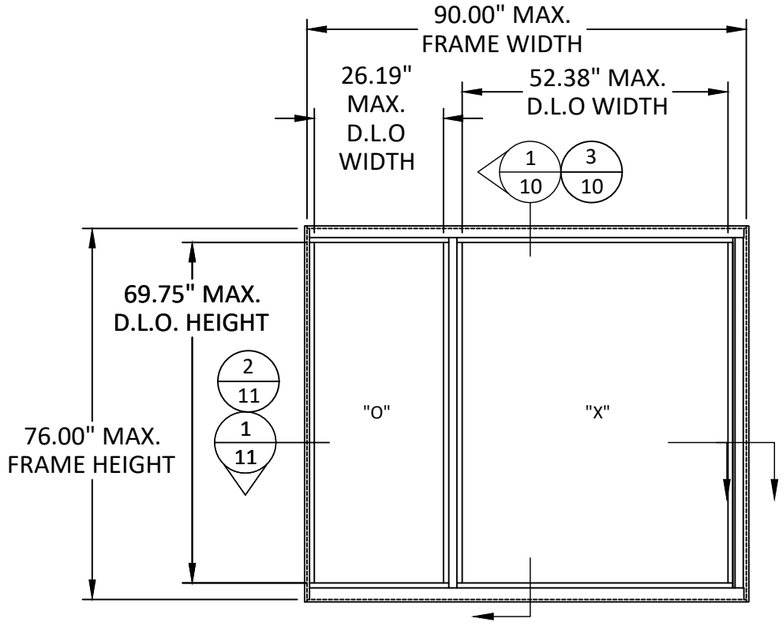

ELEVATION

OX/XO HORIZONTAL SLIDER - 1/4 OR 1/3

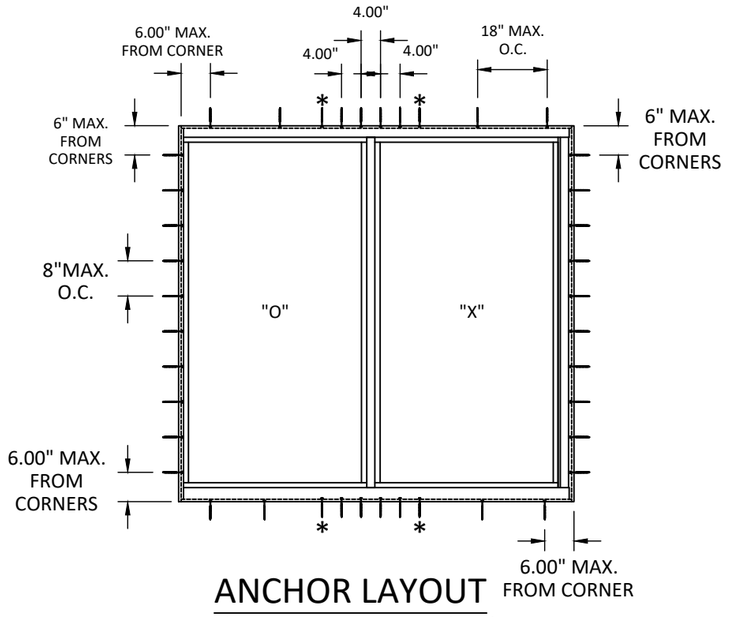

ANCHOR LAYOUT

OX/XO HORIZONTAL SLIDER - 1/2 - 1/2
THROUGH FRAME

THE ANCHORS WITH THE STAR (*)
ARE ONLY REQUIRED FOR
MASONRY SUBTRATE INSTALLATION

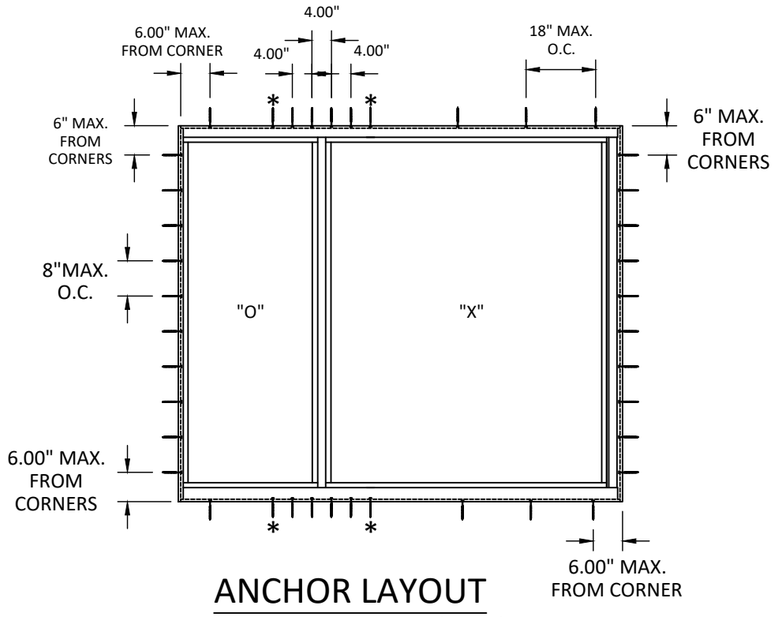

ANCHOR LAYOUT

OX/XO HORIZONTAL SLIDER - 1/4 OR 1/3
THROUGH FRAME

THE ANCHORS WITH THE STAR (*)
ARE ONLY REQUIRED FOR
MASONRY SUBTRATE INSTALLATION

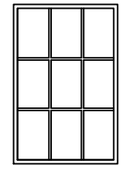

SIMULATED DIVIDED LITE
ALSO QUALIFIED

EUROCRAFT
7905 NW 77TH AVE
MEDLEY, FL 33166
PH: (305) 713-1871 FX: (305) 713-1872

TITLE: 300 SERIES HORIZONTAL SLIDING WINDOW (IMPACT) (HVHZ)
ELEVATIONS AND
ANCHOR LAYOUTS - OX/XO

PREPARED BY:
BUILDING DROPS, INC.
398 E. DANIA BEACH BLVD., STE. 338
DANIA BEACH, FL 33004
PH: (954)399-8478
FAX: (954)744.4738
WEB: www.buildingdrops.com

REMARKS	BY	DATE

THE INSTALLATION DETAILS DESCRIBED HEREIN ARE GENERIC AND MAY NOT REFLECT ACTUAL CONDITIONS FOR A SPECIFIC SITE. IF SITE CONDITIONS CAUSE INSTALLATION TO DEVIATE FROM THE REQUIREMENTS DETAILED HEREIN, A LICENSED ENGINEER OR ARCHITECT SHALL PREPARE SITE SPECIFIC DOCUMENTS FOR USE WITH THIS DOCUMENT.

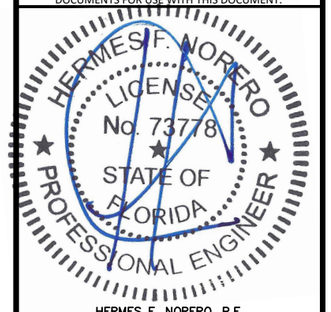

HERMES F. NORERO, P.E.
FLORIDA P.E. No 73778
BUILDING DROPS, INC
398 E. DANIA BEACH BLVD. # 338
DANIA BEACH, FL 33004
FBPE CERT. OF AUTHORIZATION No. 29578

FL#: FL31966

DATE: 01.23.2020

DWG. BY:	CHK. BY:
JA	HFN

SCALE: NTS

DWG. #: ECI025

SHEET: 3 OF 11

4/10/2020 7:11 PM

s:\projects\eurocraft industries inc\fbc-19-0238 - fbc submittal - aluminum impact products\dwgs\submittal drawings\horizontal slider\eci025 - horizontal slider.dwg

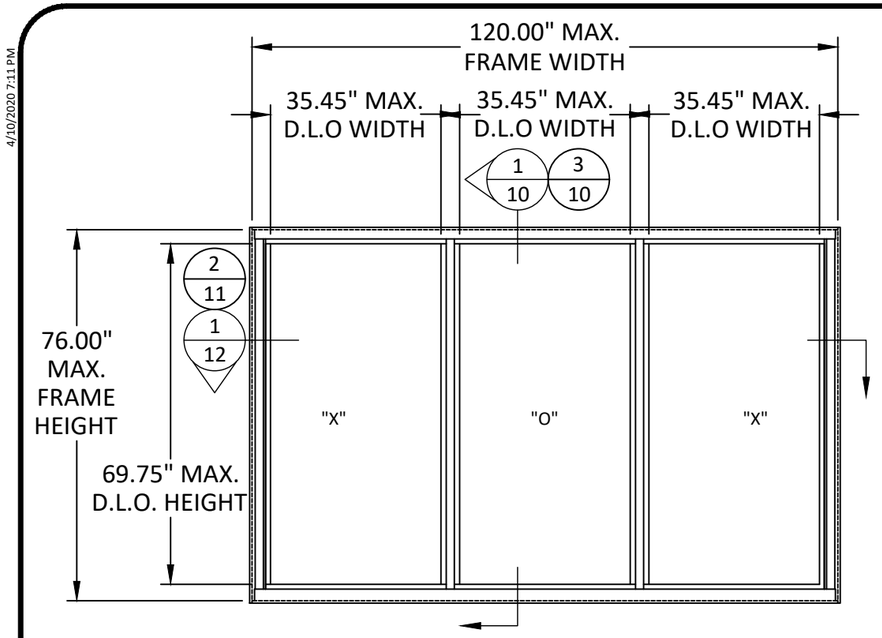

ELEVATION

XOX HORIZONTAL SLIDER WINDOW 1/3-1/3-1/3

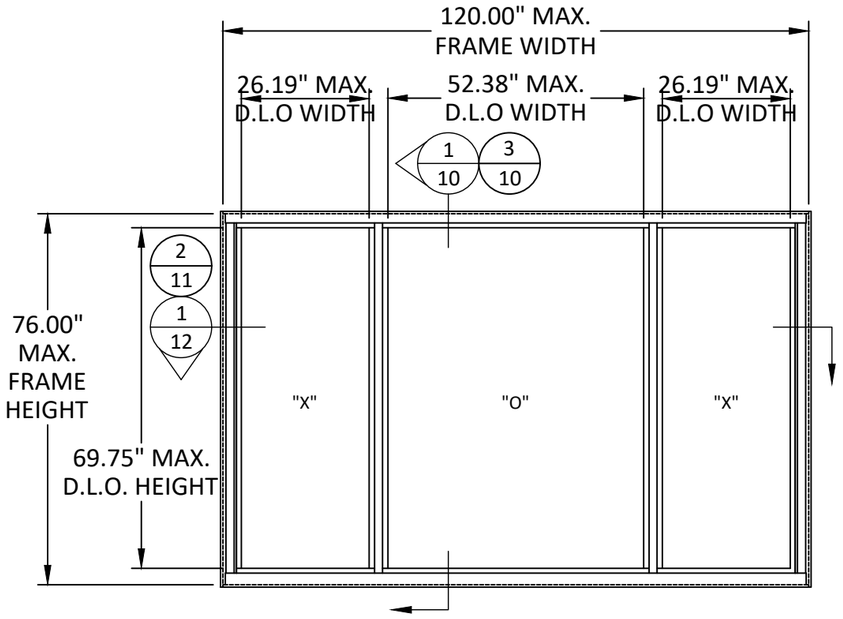

ELEVATION

XOX HORIZONTAL SLIDER WINDOW 1/4-1/2-1/4

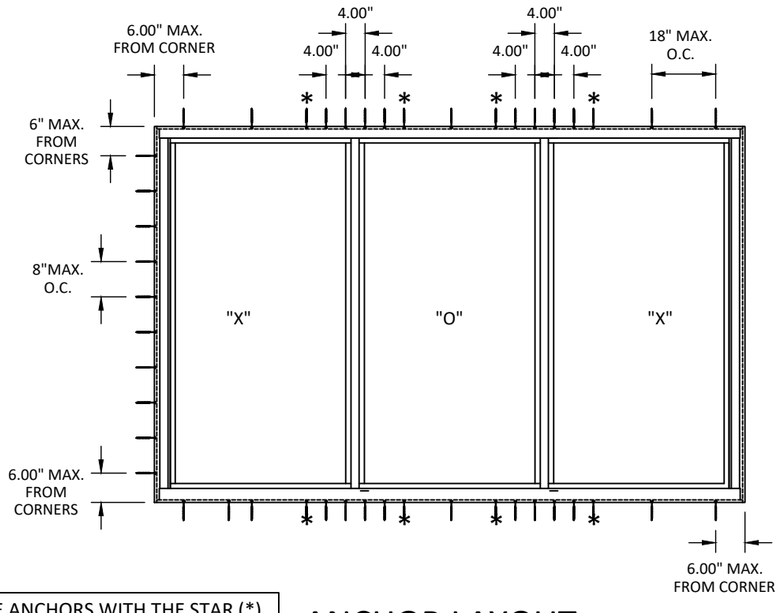

THE ANCHORS WITH THE STAR (*) ARE ONLY REQUIRED FOR MASONRY SUBTRATE INSTALLATION

ANCHOR LAYOUT

HORIZONTAL SLIDER - 1/3 - 1/3 - 1/3
THROUGH FRAME

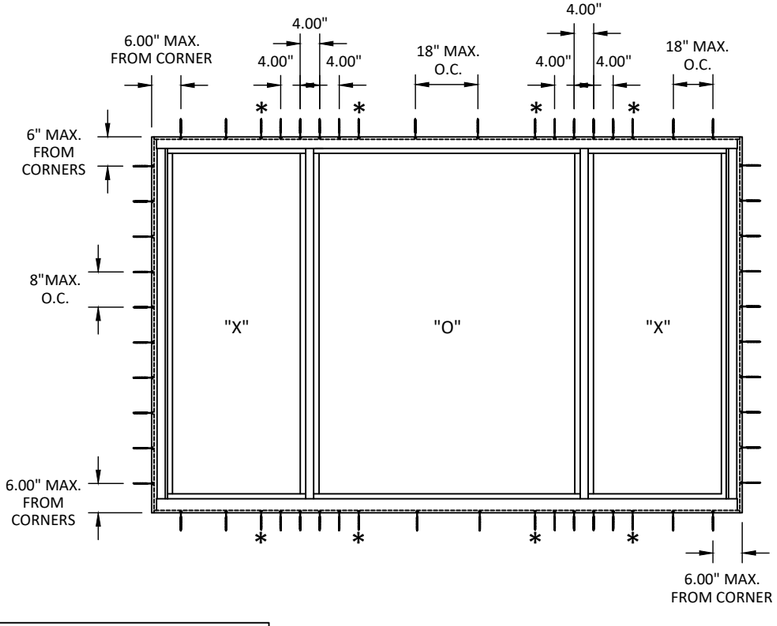

THE ANCHORS WITH THE STAR (*) ARE ONLY REQUIRED FOR MASONRY SUBTRATE INSTALLATION

ANCHOR LAYOUT

XOX HORIZONTAL SLIDER - 1/2 - 1/4 - 1/2
THROUGH FRAME

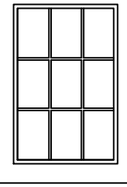

SIMULATED DIVIDED LITE ALSO QUALIFIED

EUROCRAFT
7905 NW 77TH AVE
MEDLEY, FL 33166
PH: (305) 713-1871 FX: (305) 713-1872

TITLE: 300 SERIES HORIZONTAL SLIDING WINDOW (IMPACT) (HVHZ)
ELEVATIONS AND ANCHOR LAYOUTS - XOX

PREPARED BY:
BUILDING DROPS, INC.
398 E. DANIA BEACH BLVD., STE. 338
DANIA BEACH, FL 33004
PH: (954)399-8478
FAX: (954)744.4738
WEB: www.buildingdrops.com

REMARKS	BY	DATE

THE INSTALLATION DETAILS DESCRIBED HEREIN ARE GENERIC AND MAY NOT REFLECT ACTUAL CONDITIONS FOR A SPECIFIC SITE. IF SITE CONDITIONS CAUSE INSTALLATION TO DEVIATE FROM THE REQUIREMENTS DETAILED HEREIN, A LICENSED ENGINEER OR ARCHITECT SHALL PREPARE SITE SPECIFIC DOCUMENTS FOR USE WITH THIS DOCUMENT.

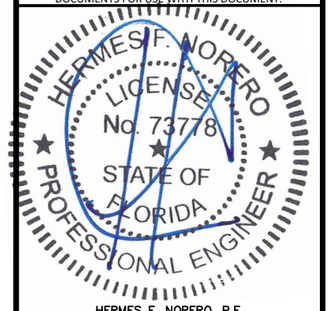

HERMES F. NORERO, P.E.
FLORIDA P.E. No 73778
BUILDING DROPS, INC
398 E. DANIA BEACH BLVD. # 338
DANIA BEACH, FL 33004
FBPE CERT. OF AUTHORIZATION No. 29578

FL#: FL31966

DATE: 01.23.2020

DWG. BY:	CHK. BY:
JA	HFN

SCALE: NTS

DWG. #: ECI025

SHEET: 4 OF 11

4/10/2020 7:11 PM

s:\projects\eurocraft industries inc\fbc-19-0238 - fbc submittal - aluminum impact products\dwgs\submittal drawings\horizontal slider\eci025 - horizontal slider.dwg

WINDOW DESIGN PRESSURE - OX/XO

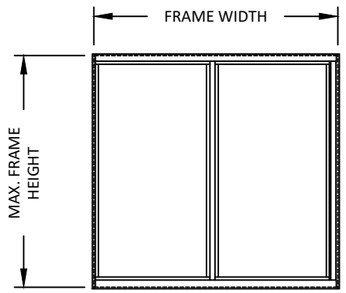

ELEVATION

HORIZONTAL SLIDER WINDOW - 1/2 - 1/2

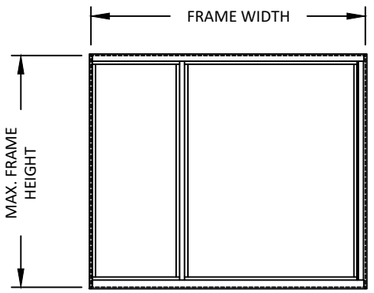

ELEVATION

HORIZONTAL SLIDER WINDOW - 1/3 - 2/3

1/2 - 1/2 WINDOW CONFIGURATION DESIGN PRESSURES (+/- PSF)			
FRAME DIMENSIONS		GLASS CONFIGURATIONS	
WIDTH (IN)	HEIGHT (IN)	G1, G3 & G5	G2, G4 & G6
30	30	120	140
36		120	140
42		120	140
48		120	140
54		120	140
60		120	140
66		120	140
72		120	140
78		120	140
80		120	140
84		120	140
90		120	140
96		120	140
102		120	140
108		120	140
114		120	140
120		120	140
30	36	120	140
36		120	140
42		120	140
48		120	140
54		120	140
60		120	140
66		120	140
72		120	140
78		120	140
80		120	140
84		120	140
90		120	140
96		120	140
102		120	140
108		120	140
114		120	140
120		120	140
30	42	120	140
36		120	140
42		120	140
48		120	140
54		120	140
60		120	140
66		120	140
72		120	140
78		120	140
80		120	140
84		118	138
90		118	138
96		118	138
102		118	138
108		118	138
114		118	138
120		118	138
30	48	120	140
36		120	140
42		120	140
48		120	140
54		120	140
60		120	140
66		120	140
72		120	140
78		120	140
80		120	140
84		113	132
90		105	122
96		101	118
102		101	118
108		101	118
114		101	118
120		101	118

1/2 - 1/2 WINDOW CONFIGURATION DESIGN PRESSURES (+/- PSF)			
FRAME DIMENSIONS		GLASS CONFIGURATIONS	
WIDTH (IN)	HEIGHT (IN)	G1, G3 & G5	G2, G4 & G6
30	54	120	140
36		120	140
42		120	140
48		120	140
54		120	140
60		120	140
66		120	140
72		120	140
78		120	140
80		120	140
84		113	132
90		105	122
96		97	114
102		91	106
108		89	103
30	60	120	140
36		120	140
42		120	140
48		120	140
54		120	140
60		120	140
66		120	140
72		120	140
78		120	140
80		120	140
84		113	132
90		105	122
96		97	114
30	66	120	140
36		120	140
42		120	140
48		120	140
54		120	140
60		120	140
66		120	140
72		120	140
78		120	140
80		120	140
84		113	132
90		105	122
30	72	120	140
36		120	140
42		120	140
48		120	140
54		120	140
60		120	140
66		120	140
72		120	140
78		120	140
80		120	140
84		113	132
30	76	120	140
36		120	140
42		120	140
48		120	140
54		120	140
60		120	140
66		120	140
72		120	140
78		120	140
80		120	140

EUROCRAFT
7905 NW 77TH AVE
MEDLEY, FL 33166
PH: (305) 713-1871 FX: (305) 713-1872

TITLE: 300 SERIES HORIZONTAL SLIDING WINDOW (IMPACT) (HVHZ)
WINDOW DESIGN PRESSURES - OX/XO

PREPARED BY:
BUILDING DROPS, INC.
398 E. DANIA BEACH BLVD., STE. 338
DANIA BEACH, FL 33004
PH: (954)399-8478
FAX: (954)744.4738
WEB: www.buildingdrops.com

REMARKS	BY	DATE

THE INSTALLATION DETAILS DESCRIBED HEREIN ARE GENERIC AND MAY NOT REFLECT ACTUAL CONDITIONS FOR A SPECIFIC SITE. IF SITE CONDITIONS CAUSE INSTALLATION TO DEVIATE FROM THE REQUIREMENTS DETAILED HEREIN, A LICENSED ENGINEER OR ARCHITECT SHALL PREPARE SITE SPECIFIC DOCUMENTS FOR USE WITH THIS DOCUMENT.

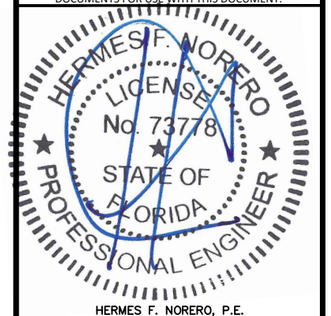

HERMES F. NORERO, P.E.
FLORIDA P.E. No 73778
BUILDING DROPS, INC
398 E. DANIA BEACH BLVD. # 338
DANIA BEACH, FL 33004
FBPE CERT. OF AUTHORIZATION No. 29578

FL#: FL31966

DATE: 01.23.2020

DWG. BY: JA | CHK. BY: HFN

SCALE: NTS

DWG. #: ECI025

SHEET: 5 OF 11

4/10/2020 7:11 PM

WINDOW DESIGN PRESSURE - XOX

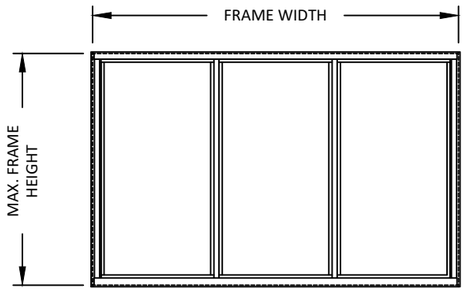

ELEVATION

HORIZONTAL SLIDER WINDOW - 1/3 - 1/3 - 1/3

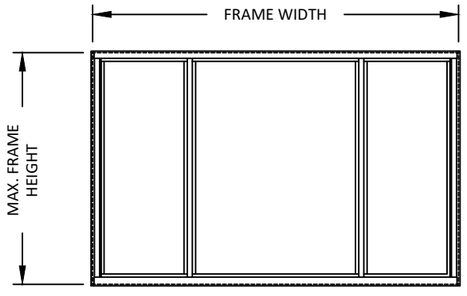

ELEVATION

HORIZONTAL SLIDER WINDOW - 1/4 - 1/2 - 1/4

1/4-1/2-1/4 WINDOW CONFIGURATION DESIGN PRESSURES (+/- PSF)			
FRAME DIMENSIONS		GLASS CONFIGURATIONS	
WIDTH (IN)	HEIGHT (IN)	G1, G3 & G5	G2, G4 & G6
36	30	120	140
42		120	140
48		120	140
54		120	140
60		120	140
66		120	140
72		120	140
78		120	140
80		120	140
84		120	140
90		120	140
96		120	140
102		120	140
108		120	140
114		120	140
120		120	140
126		120	140
132		120	140
138		120	140
144		120	140
36	36	120	140
42		120	140
48		120	140
54		120	140
60		120	140
66		120	140
72		120	140
78		120	140
80		120	140
84		120	140
90		120	140
96		120	140
102		120	140
108		120	140
114		120	140
120		120	140
126		120	140
132		120	140
138		120	140
144		120	140
36	42	120	140
42		120	140
48		120	140
54		120	140
60		120	140
66		120	140
72		120	140
78		120	140
80		120	140
84		120	140
90		120	140
96		120	140
102		120	140
108		120	140
114		120	140
120		120	140
126		120	140
132		120	140
138		120	140
144		120	140

1/4-1/2-1/4 WINDOW CONFIGURATION DESIGN PRESSURES (+/- PSF)			
FRAME DIMENSIONS		GLASS CONFIGURATIONS	
WIDTH (IN)	HEIGHT (IN)	G1, G3 & G5	G2, G4 & G6
36	48	120	140
42		120	140
48		120	140
54		120	140
60		120	140
66		120	140
72		120	140
78		120	140
80		120	140
84		120	140
90		120	140
96		120	140
102		120	140
108		120	140
114		120	140
120		120	140
126		120	140
132		120	140
138		120	140
144		120	140
36	54	120	140
42		120	140
48		120	140
54		120	140
60		120	140
66		120	140
72		120	140
78		120	140
80		120	140
84		120	140
90		120	140
96		120	140
102		120	140
108		120	140
114		120	140
120		120	140
126		120	140
132		120	140
138		120	140
144		120	140
36	60	120	140
42		120	140
48		120	140
54		120	140
60		120	140
66		120	140
72		120	140
78		120	140
80		120	140
84		120	140
90		120	140
96		120	140
102		120	140
108		120	140
114		120	140
120		120	140
126		116	136
132		116	136
138		116	136
144		116	136

1/4-1/2-1/4 WINDOW CONFIGURATION DESIGN PRESSURES (+/- PSF)			
FRAME DIMENSIONS		GLASS CONFIGURATIONS	
WIDTH (IN)	HEIGHT (IN)	G1, G3 & G5	G2, G4 & G6
36	66	120	140
42		120	140
48		120	140
54		120	140
60		120	140
66		120	140
72		120	140
78		120	140
80		120	140
84		120	140
90		120	140
96		120	140
102		120	140
108		120	140
114		120	140
120		120	140
126		114	133
132		109	127
138		105	122
36	72	120	140
42		120	140
48		120	140
54		120	140
60		120	140
66		120	140
72		120	140
78		120	140
80		120	140
84		120	140
90		120	140
96		120	140
102		120	140
108		120	140
114		120	140
120		120	140
126		114	133
36	76	120	140
42		120	140
48		120	140
54		120	140
60		120	140
66		120	140
72		120	140
78		120	140
80		120	140
84		120	140
90		120	140
96		120	140
102		120	140
108		120	140
114		120	140
120		120	140

EUROCRAFT
7905 NW 77TH AVE
MEDLEY, FL 33166
PH: (305) 713-1871 FX: (305) 713-1872

TITLE: 300 SERIES HORIZONTAL SLIDING WINDOW (IMPACT) (HVHZ)

WINDOW DESIGN PRESSURES - XOX

PREPARED BY:
BUILDING DROPS, INC.
398 E. DANIA BEACH BLVD., STE. 338
DANIA BEACH, FL 33004
PH: (954)399-8478
FAX: (954)744.4738
WEB: www.buildingdrops.com

REMARKS	BY	DATE

THE INSTALLATION DETAILS DESCRIBED HEREIN ARE GENERIC AND MAY NOT REFLECT ACTUAL CONDITIONS FOR A SPECIFIC SITE. IF SITE CONDITIONS CAUSE INSTALLATION TO DEVIATE FROM THE REQUIREMENTS DETAILED HEREIN, A LICENSED ENGINEER OR ARCHITECT SHALL PREPARE SITE SPECIFIC DOCUMENTS FOR USE WITH THIS DOCUMENT.

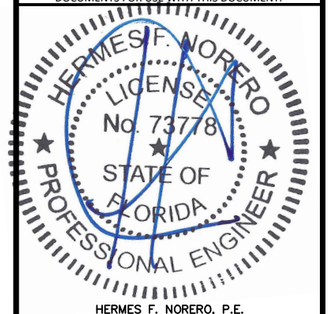

HERMES F. NORERO, P.E.
FLORIDA P.E. No 73778
BUILDING DROPS, INC
398 E. DANIA BEACH BLVD. # 338
DANIA BEACH, FL 33004
FBPE CERT. OF AUTHORIZATION No. 29578

FL#: FL31966

DATE: 01.23.2020

DWG. BY: JA | CHK. BY: HFN

SCALE: NTS

DWG. #: ECI025

SHEET: 6 OF 11

s:\projects\eurocraft industries inc\fbc-19-0238 - fbc submittal - aluminum impact products\dwgs\submittal drawings\horizontal slider\eci025 - horizontal slider.dwg

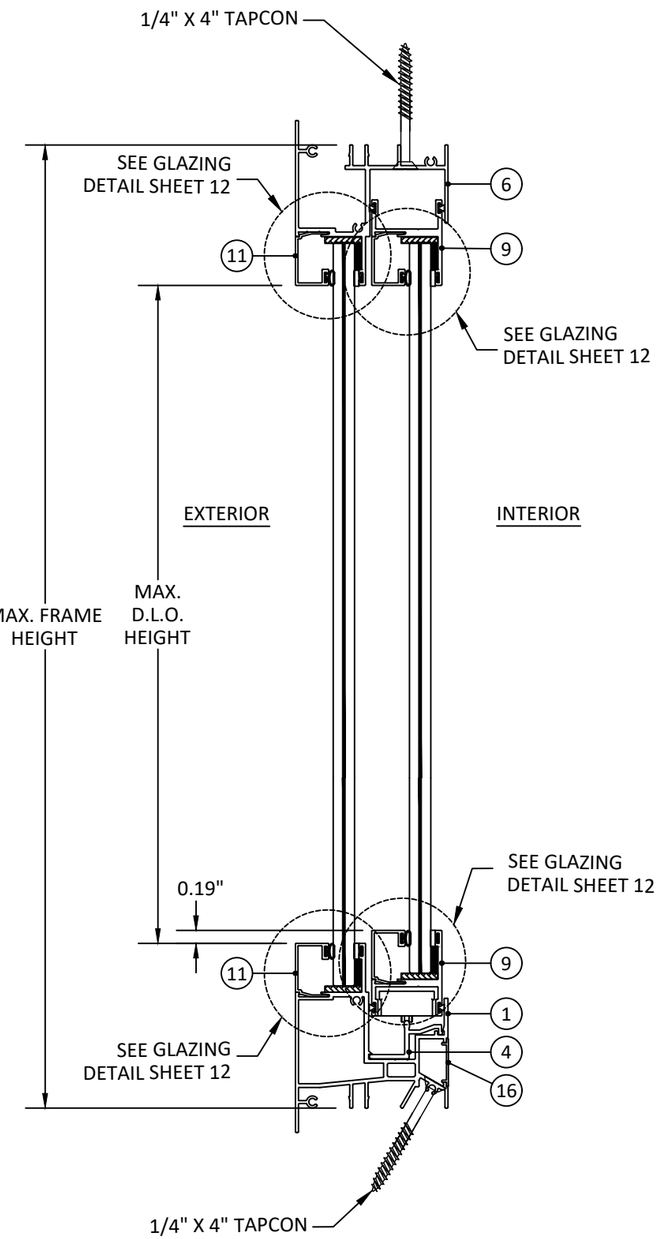

A/7 VERTICAL SECTION

HORIZONTAL SLIDER WINDOW

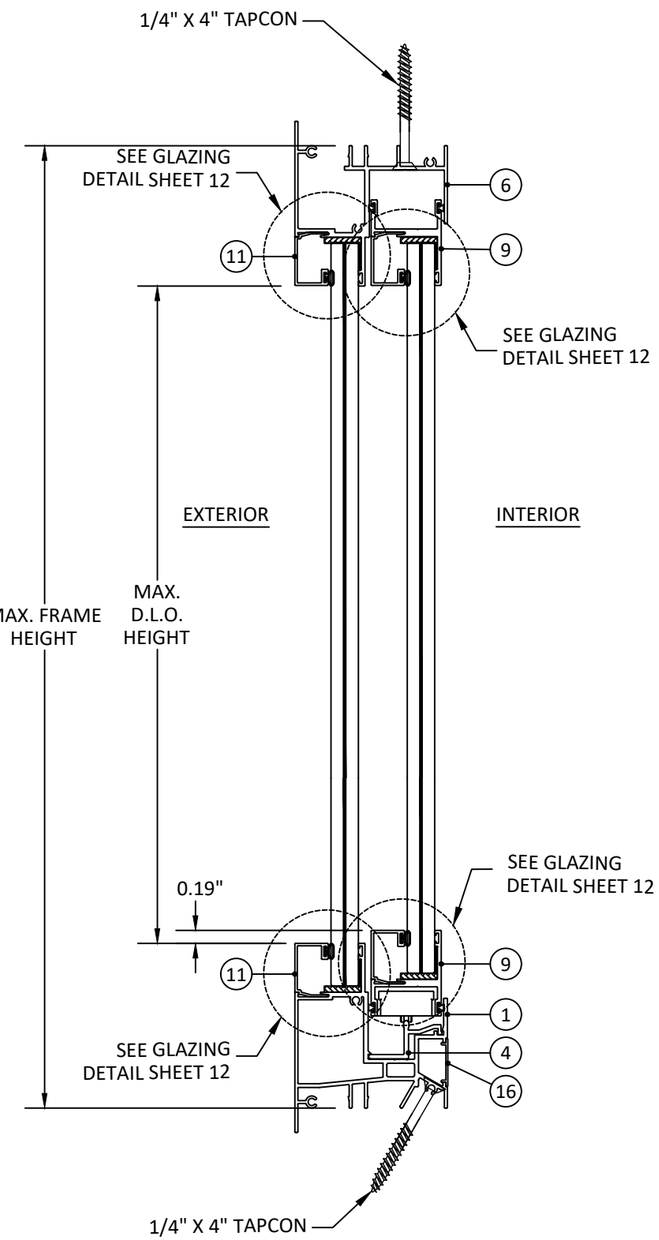

B/7 VERTICAL SECTION

HORIZONTAL SLIDER WINDOW

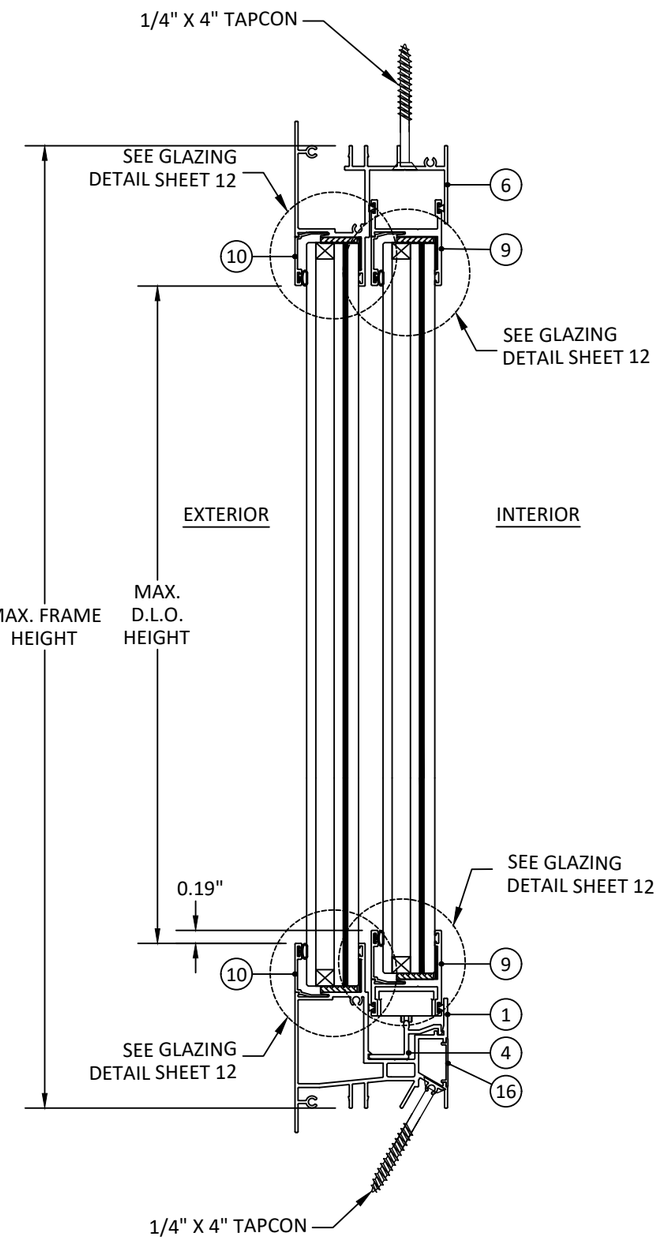

C/7 VERTICAL SECTION

HORIZONTAL SLIDER WINDOW

EUROCRAFT
7905 NW 77TH AVE
MEDLEY, FL 33166
PH: (305) 713-1871 FX: (305) 713-1872

TITLE: 300 SERIES HORIZONTAL SLIDING WINDOW (IMPACT) (HVHZ)

VERTICAL SECTIONS

PREPARED BY:
BUILDING DROPS, INC.
398 E. DANIA BEACH BLVD., STE. 338
DANIA BEACH, FL 33004
PH: (954)399-8478
FAX: (954)744.4738
WEB: www.buildingdrops.com

REMARKS	BY	DATE

THE INSTALLATION DETAILS DESCRIBED HEREIN ARE GENERIC AND MAY NOT REFLECT ACTUAL CONDITIONS FOR A SPECIFIC SITE. IF SITE CONDITIONS CAUSE INSTALLATION TO DEVIATE FROM THE REQUIREMENTS DETAILED HEREIN, A LICENSED ENGINEER OR ARCHITECT SHALL PREPARE SITE SPECIFIC DOCUMENTS FOR USE WITH THIS DOCUMENT.

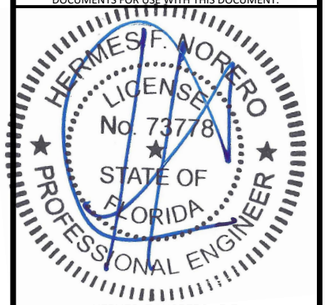

HERMES F. NORERO, P.E.
FLORIDA P.E. No 73778
BUILDING DROPS, INC
398 E. DANIA BEACH BLVD. # 338
DANIA BEACH, FL 33004
FBPE CERT. OF AUTHORIZATION No. 29578

FL#: FL31966

DATE: 01.23.2020

DWG. BY:	CHK. BY:
JA	HFN

SCALE: NTS

DWG. #: ECI025

SHEET: 7 OF 11

4/10/2020 7:11 PM
s:\projects\eurocraft industries inc\fbc-19-0238 - fbc submittal - aluminum impact products\dwgs\submittal drawings\horizontal slider\eci025 - horizontal slider.dwg

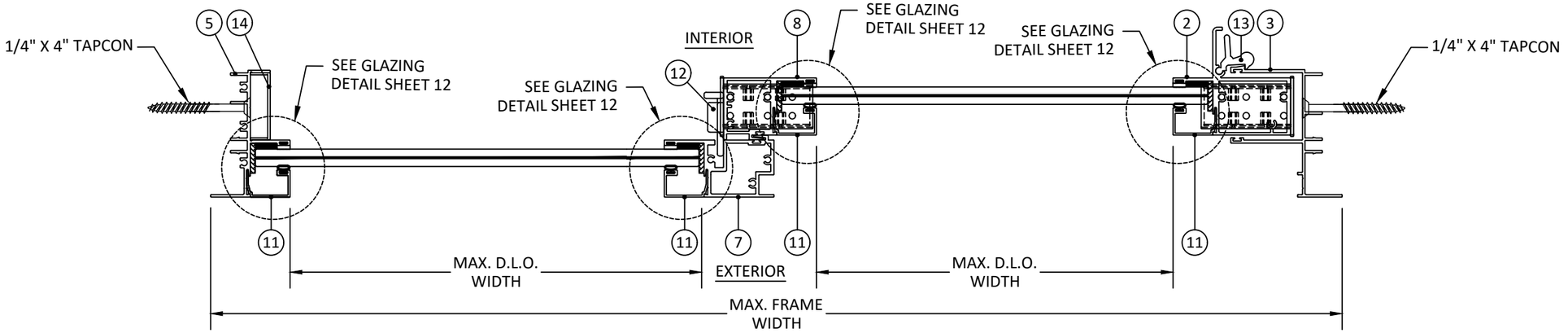

A/8 HORIZONTAL SECTION

HORIZONTAL SLIDER WINDOW

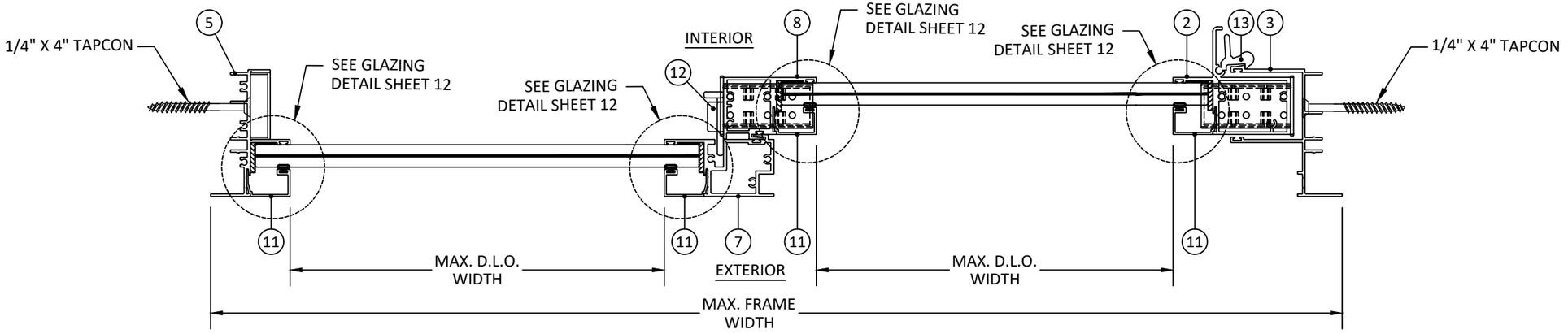

B/8 HORIZONTAL SECTION

HORIZONTAL SLIDER WINDOW

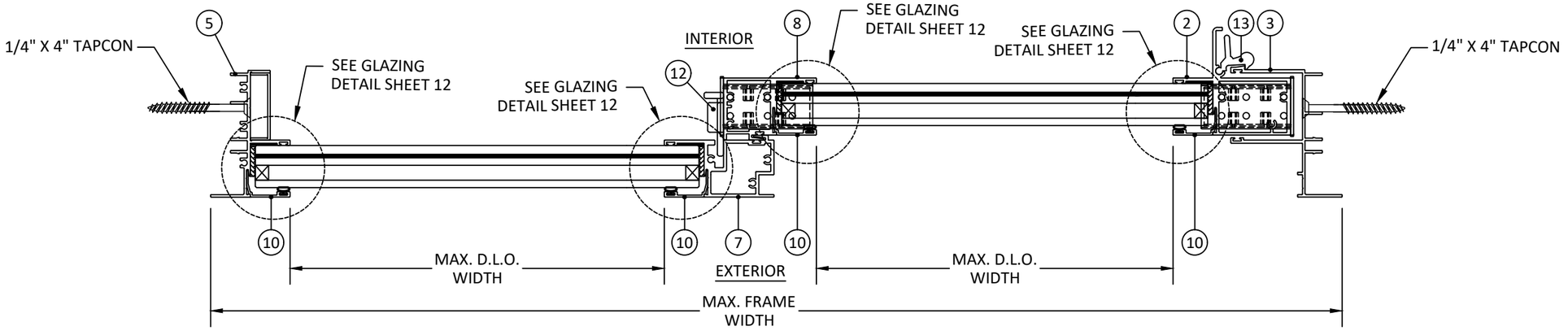

C/8 HORIZONTAL SECTION

HORIZONTAL SLIDER WINDOW

EUROCRAFT
7905 NW 77TH AVE
MEDLEY, FL 33166
PH: (305) 713-1871 FX: (305) 713-1872

TITLE: 300 SERIES HORIZONTAL SLIDING WINDOW (IMPACT) (HVHZ)

HORIZONTAL SECTIONS - OX/XO

PREPARED BY:
BUILDING DROPS, INC.
398 E. DANIA BEACH BLVD., STE. 338
DANIA BEACH, FL 33004
PH: (954)399-8478
FAX: (954)744.4738
WEB: www.buildingdrops.com

REMARKS	BY	DATE

THE INSTALLATION DETAILS DESCRIBED HEREIN ARE GENERIC AND MAY NOT REFLECT ACTUAL CONDITIONS FOR A SPECIFIC SITE. IF SITE CONDITIONS CAUSE INSTALLATION TO DEVIATE FROM THE REQUIREMENTS DETAILED HEREIN, A LICENSED ENGINEER OR ARCHITECT SHALL PREPARE SITE SPECIFIC DOCUMENTS FOR USE WITH THIS DOCUMENT.

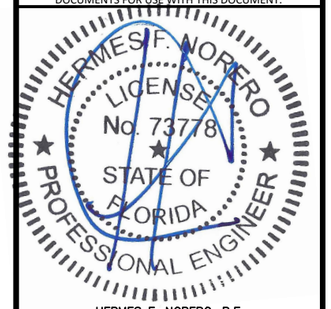

HERMES F. NORERO, P.E.
FLORIDA P.E. No 73778
BUILDING DROPS, INC
398 E. DANIA BEACH BLVD. # 338
DANIA BEACH, FL 33004
FBPE CERT. OF AUTHORIZATION No. 29578

FL#: FL31966

DATE: 01.23.2020

DWG. BY: JA | CHK. BY: HFN

SCALE: NTS

DWG. #: ECI025

SHEET: 8 OF 11

4/10/2020 7:11 PM
s:\projects\eurocraft industries inc\fbc-19-0238 - fbc submittal - aluminum impact products\dwgs\submittal drawings\horizontal slider\eci025 - horizontal slider.dwg

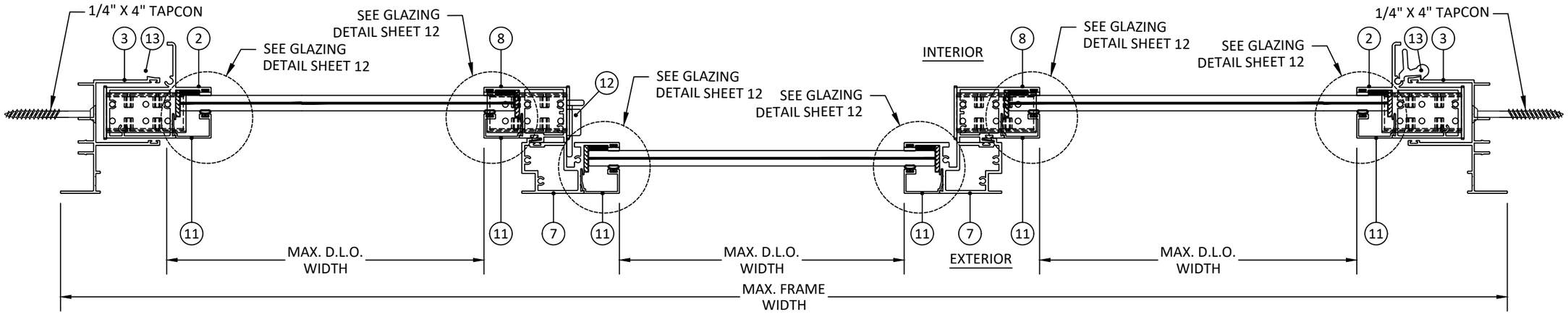

A/9 HORIZONTAL SECTION

HORIZONTAL SLIDER WINDOW

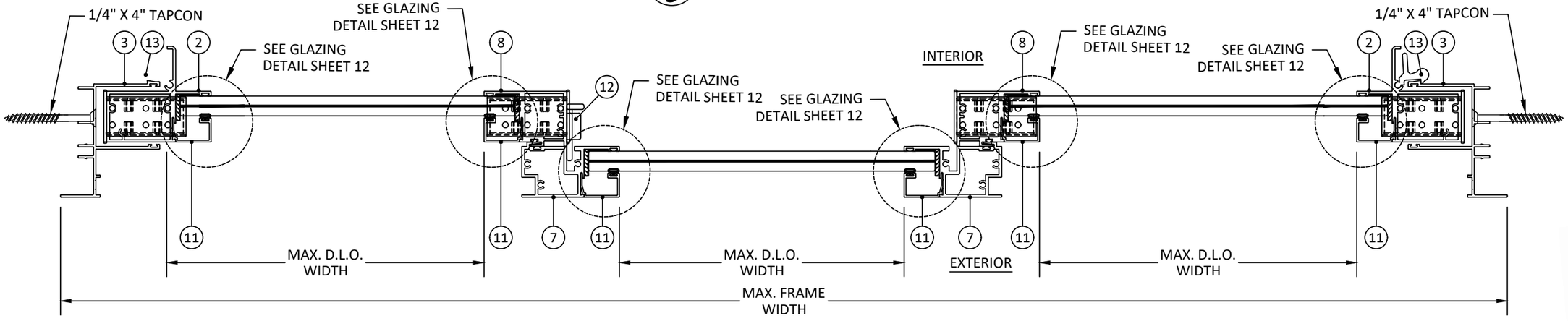

B/9 HORIZONTAL SECTION

HORIZONTAL SLIDER WINDOW

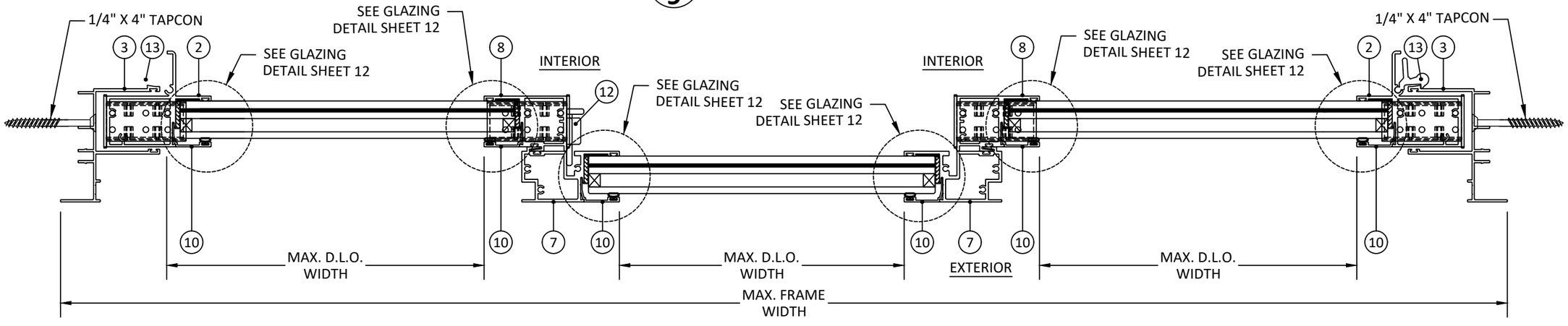

C/9 HORIZONTAL SECTION

HORIZONTAL SLIDER WINDOW

EUROCRAFT
7905 NW 77TH AVE
MEDLEY, FL 33166
PH: (305) 713-1871 FX: (305) 713-1872

TITLE: 300 SERIES HORIZONTAL SLIDING WINDOW (IMPACT) (HVHZ)

HORIZONTAL SECTIONS- XOX

PREPARED BY:
BUILDING DROPS, INC.
398 E. DANIA BEACH BLVD., STE. 338
DANIA BEACH, FL 33004
PH: (954)399-8478
FAX: (954)744.4738
WEB: www.buildingdrops.com

REMARKS	BY	DATE

THE INSTALLATION DETAILS DESCRIBED HEREIN ARE GENERIC AND MAY NOT REFLECT ACTUAL CONDITIONS FOR A SPECIFIC SITE. IF SITE CONDITIONS CAUSE INSTALLATION TO DEVIATE FROM THE REQUIREMENTS DETAILED HEREIN, A LICENSED ENGINEER OR ARCHITECT SHALL PREPARE SITE SPECIFIC DOCUMENTS FOR USE WITH THIS DOCUMENT.

HERMES F. NORERO LICENSE No. 73778 STATE OF FLORIDA PROFESSIONAL ENGINEER

HERMES F. NORERO, P.E.
FLORIDA P.E. No 73778
BUILDING DROPS, INC
398 E. DANIA BEACH BLVD. # 338
DANIA BEACH, FL 33004
FBPE CERT. OF AUTHORIZATION No. 29578

FL#: FL31966

DATE: 01.23.2020

DWG. BY: JA | CHK. BY: HFN

SCALE: NTS

DWG. #: ECI025

SHEET: 9 OF 11

4/10/2020 7:11 PM
s:\projects\eurocraft industries inc\fbc-19-0238 - fbc submittal - aluminum impact products\dwgs\submittal drawings\horizontal slider\eci025 - horizontal slider.dwg

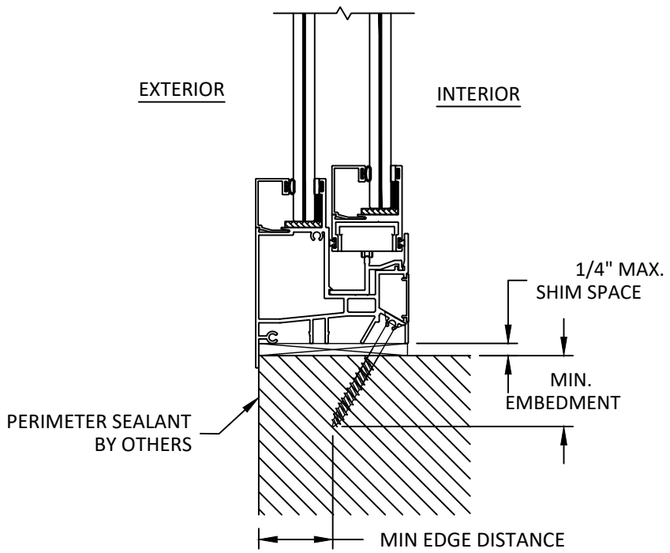

A/10 HORIZONTAL SECTION

THROUGH FRAME (FIX JAMB) - WITH EQUAL LEG

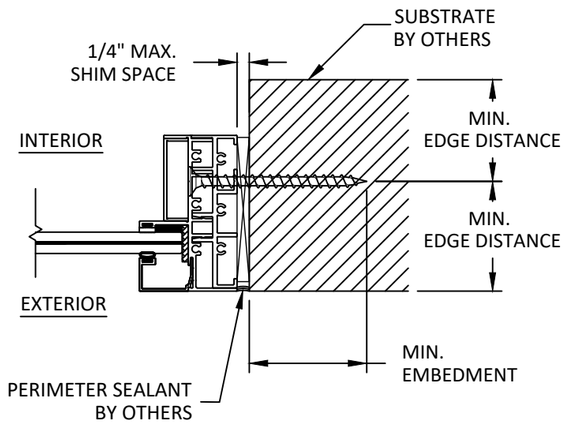

B/10 HORIZONTAL SECTION

THROUGH FRAME (FIX JAMB) - WITH EQUAL LEG

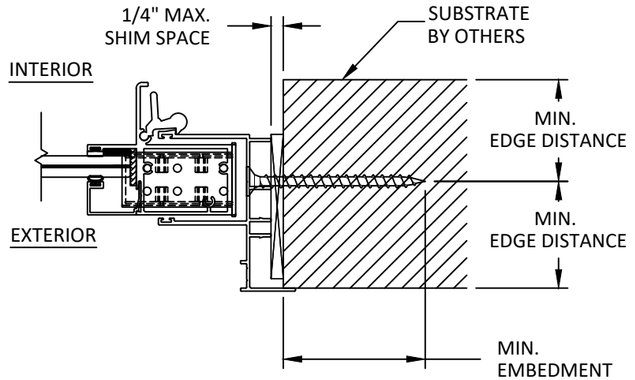

C/10 HORIZONTAL SECTION

THROUGH FRAME (LOCK JAMB) - W/O UNEQUAL LEG

HEAD AND JAMB SIMILAR

INSTALLATION NOTES:

1. ONE (1) INSTALLATION ANCHOR IS REQUIRED AT EACH ANCHOR LOCATION SHOWN.

2. THE NUMBER OF INSTALLATION ANCHORS DEPICTED IS THE MINIMUM NUMBER OF ANCHORS TO BE USED FOR PRODUCT INSTALLATION OF THE MAXIMUM SIZE LISTED.

3. INSTALL INDIVIDUAL INSTALLATION ANCHORS WITHIN A TOLERANCE OF ±1/4 INCH THE DEPICTED LOCATION & SPACING IN THE ANCHOR LAYOUT DETAILS (I.E., WITHOUT CONSIDERATION OF TOLERANCES). TOLERANCES ARE NOT CUMULATIVE FROM ONE INSTALLATION ANCHOR TO THE NEXT.

4. SHIM AS REQUIRED AT EACH INSTALLATION ANCHOR WITH LOAD BEARING SHIM(S). MAXIMUM ALLOWABLE SHIM STACK TO BE 1/4 INCH. SHIM WHERE SPACE OF 1/16 INCH OR GREATER OCCURS. SHIM(S) SHALL BE CONSTRUCTED OF HIGH DENSITY PLASTIC OR BETTER.

5. FOR MASONRY OR CONCRETE OPENINGS, A 1X WOOD BUCK MAY BE USED (OPTIONAL) AS LONG AS THE MINIMUM EMBEDMENT AND EDGE DISTANCE REQUIREMENTS ARE STILL MET WITHIN THE CORRESPONDING HOST SUBSTRATE. SEE GENERAL NOTE #3 ON SHEET 1 FOR MORE INFORMATION.

6. MINIMUM EMBEDMENT AND EDGE DISTANCE EXCLUDE WALL FINISHES, INCLUDING BUT NOT LIMITED TO STUCCO, FOAM, BRICK VENEER, AND SIDING.

7. INSTALLATION ANCHORS AND ASSOCIATED HARDWARE MUST BE MADE OF CORROSION RESISTANT MATERIAL OR HAVE A CORROSION RESISTANT COATING.

8. FOR HOLLOW BLOCK AND GROUT FILLED BLOCK, DO NOT INSTALL INSTALLATION ANCHORS INTO MORTAR JOINTS. EDGE DISTANCE IS MEASURED FROM FREE EDGE OF BLOCK OR EDGE OF MORTAR JOINT INTO FACE SHELL OF BLOCK.

9. INSTALLATION ANCHORS SHALL BE INSTALLED IN ACCORDANCE WITH ANCHOR MANUFACTURER'S INSTALLATION INSTRUCTIONS, AND ANCHORS SHALL NOT BE USED IN SUBSTRATES WITH STRENGTHS LESS THAN THE MINIMUM STRENGTH SPECIFIED BY THE ANCHOR MANUFACTURER.

ANCHOR SCHEDULE

METHOD	ANCHOR TYPE	SUBSTRATE	ANCHOR SCHEDULE	MIN. EMBEDMENT	MIN. EDGE DISTANCE
THROUGH FRAME	A	WOOD: MIN. SG = 0.55	1/4" ITW TAPCON	2.50"	1.00"
	B	CONCRETE: MIN. F'c = 3000 PSI	1/4" ITW TAPCON	1.75"	2.50"
	C	METAL: 18 GAUGE STEE, MIN. FY = 33 KSI	1/4" TEK SCREW	3 THREADS MIN. PENETRATION BEYOND METAL	0.50"
	D	MASONRY: CMU PER ASTM C90 MIN. 2000 PSI	1/4" ITW TAPCON	1.00"	4.00"

EUROCRAFT
7905 NW 77TH AVE
MEDLEY, FL 33166
PH: (305) 713-1871 FX: (305) 713-1872

TITLE: 300 SERIES HORIZONTAL SLIDING WINDOW (IMPACT) (HVHZ)

INSTALLATION NOTES AND ANCHOR DETAILS & SCHEDULE

PREPARED BY:
BUILDING DROPS, INC.
398 E. DANIA BEACH BLVD., STE. 338
DANIA BEACH, FL 33004
PH: (954)399-8478
FAX: (954)744.4738
WEB: www.buildingdrops.com

REMARKS	BY	DATE

THE INSTALLATION DETAILS DESCRIBED HEREIN ARE GENERIC AND MAY NOT REFLECT ACTUAL CONDITIONS FOR A SPECIFIC SITE. IF SITE CONDITIONS CAUSE INSTALLATION TO DEVIATE FROM THE REQUIREMENTS DETAILED HEREIN, A LICENSED ENGINEER OR ARCHITECT SHALL PREPARE SITE SPECIFIC DOCUMENTS FOR USE WITH THIS DOCUMENT.

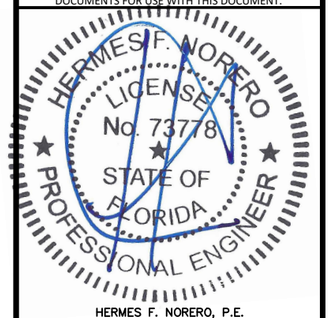

HERMES F. NORERO, P.E.
FLORIDA P.E. No 73778
BUILDING DROPS, INC
398 E. DANIA BEACH BLVD. # 338
DANIA BEACH, FL 33004
FBPE CERT. OF AUTHORIZATION No. 29578

FL#: FL31966

DATE: 01.23.2020

DWG. BY: JA | CHK. BY: HFN

SCALE: NTS

DWG. #: ECI025

SHEET: 10 OF 11

4/10/2020 7:11 PM
s:\projects\eurocraft industries inc\fbc-19-0238 - fbc submittal - aluminum impact products\dwgs\submittal drawings\horizontal slider\eci025 - horizontal slider.dwg

4/10/2020 7:11 PM
s:\projects\eurocraft industries inc\fbc-19-0238 - fbc submittal - aluminum impact products\dwgs\submittal drawings\horizontal slider\eci025 - horizontal slider.dwg

BILL OF MATERIALS

ITEM	PART No.	DESCRIPTION	MANUFACTURER
1	300-01	SILL	EUROCRAFT
2	300-02	SASH LOCK STILE	EUROCRAFT
3	300-03	FRAME JAMB	EUROCRAFT
4	300-10	ROLLER TRACK	EUROCRAFT
5	100-01	FRAME	EUROCRAFT
6	200-02	JAMB (SASH)	EUROCRAFT
7	200-03	MEETING RAIL	EUROCRAFT
8	200-05	SASH STILE	EUROCRAFT
9	200-06	SASH TOP AND BOTTOM	EUROCRAFT
10	100-02	GLAZING IG	EUROCRAFT
11	100-03	GLAZING LAMI	EUROCRAFT
12	SL 203	PD 200 SERIES ALUMINUM SASH LOCK	SULLIVAN & ASSOCIATES
13	LL-900	ALUMINUM LIFT LATCH	SULLIVAN & ASSOCIATES
14	100-04	FRAME COVER	EUROCRAFT
15	200-08	SASH STOP	EUROCRAFT
16	200-09	ANCHOR SILL COVER	EUROCRAFT
17	MPI-82503 / E-T045147E	FRAME GASKET (MPITPV, EPDM)	MPI / EXTRUSIONES
18	MPI-83010 / E-T045146E	GLAZING BEAD GASKET (TPV, EPDM)	MPI / EXTRUSIONES
19	E-B027300E	SETTING BLOCK (TPV, EPDM)	EXTRUSIONES
20	-	GLAZING - DOWSIL 791	DOW
21	-	GLAZING - GE SCS 2800	GENERAL ELECTRIC
22	W13191NK	ULTRA PILE WEATHERSEAL	ULTRA FAB
23	RU-301-EC	SASH WHEELS GUIDE (POLYAMIDE 6+15% FIBERGLASS	IDH
24	TP-300-EC	SASH TOP GUIDE (POLYAMIDE 6+15% FIBERGLASS	IDH
25	5504 SM/42400 VVQ	ACRYL-R / PLASTIC RUBBER GASKET	SEWELL/PTI PLASTIC R.
26	WA5L	WEEP FLAP	SULLIVAN & ASSOCIATES

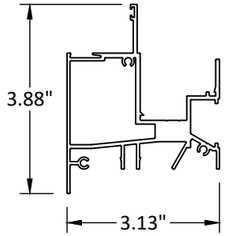

1 SILL

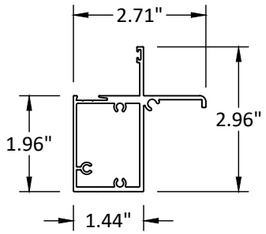

2 SASH LOCK STILE

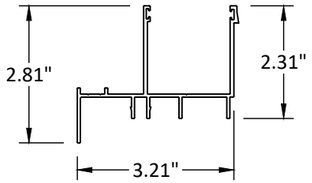

3 ROLLER JAMB

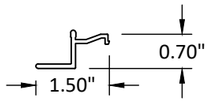

4 ROLLER TRACK

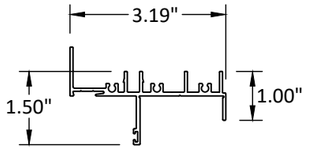

5 FRAME

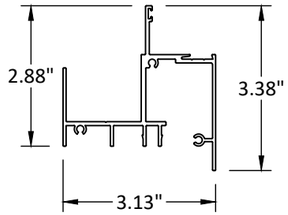

6 JAMB

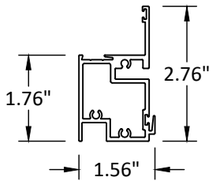

7 MEETING RAIL

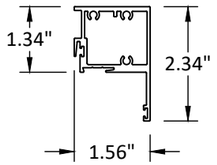

8 SASH TOP RAIL

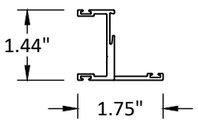

9 SASH STILE

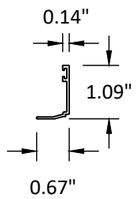

10 GLAZING IG

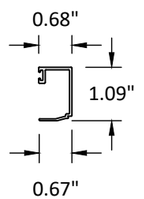

11 GLAZING LAMI

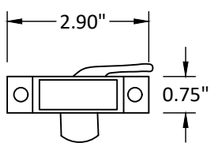

12 SASH LOCK

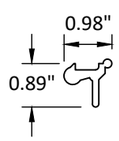

13 LIFT LATCH - SASH

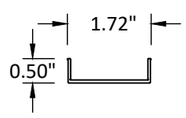

14 FRAME COVER

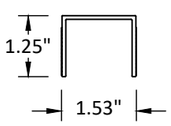

15 SASH STOP

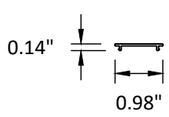

16 ANCHOR SILL COVER

EUROCRAFT
7905 NW 77TH AVE
MEDLEY, FL 33166
PH: (305) 713-1871 FX: (305) 713-1872

TITLE: 300 SERIES HORIZONTAL SLIDING WINDOW (IMPACT) (HVHZ)

BILL OF MATERIALS & COMPONENTS

PREPARED BY:
BUILDING DROPS, INC.
398 E. DANIA BEACH BLVD., STE. 338
DANIA BEACH, FL 33004
PH: (954)399-8478
FAX: (954)744.4738
WEB: www.buildingdrops.com

REMARKS	BY	DATE

THE INSTALLATION DETAILS DESCRIBED HEREIN ARE GENERIC AND MAY NOT REFLECT ACTUAL CONDITIONS FOR A SPECIFIC SITE. IF SITE CONDITIONS CAUSE INSTALLATION TO DEVIATE FROM THE REQUIREMENTS DETAILED HEREIN, A LICENSED ENGINEER OR ARCHITECT SHALL PREPARE SITE SPECIFIC DOCUMENTS FOR USE WITH THIS DOCUMENT.

HERMES F. NORERO LICENSE No. 73778 STATE OF FLORIDA PROFESSIONAL ENGINEER

HERMES F. NORERO, P.E.
FLORIDA P.E. No 73778
BUILDING DROPS, INC
398 E. DANIA BEACH BLVD. # 338
DANIA BEACH, FL 33004
FBPE CERT. OF AUTHORIZATION No. 29578

FL#: FL31966

DATE: 01.23.2020

DWG. BY: JA | CHK. BY: HFN

SCALE: NTS

DWG. #: ECI025

SHEET: 11 OF 11